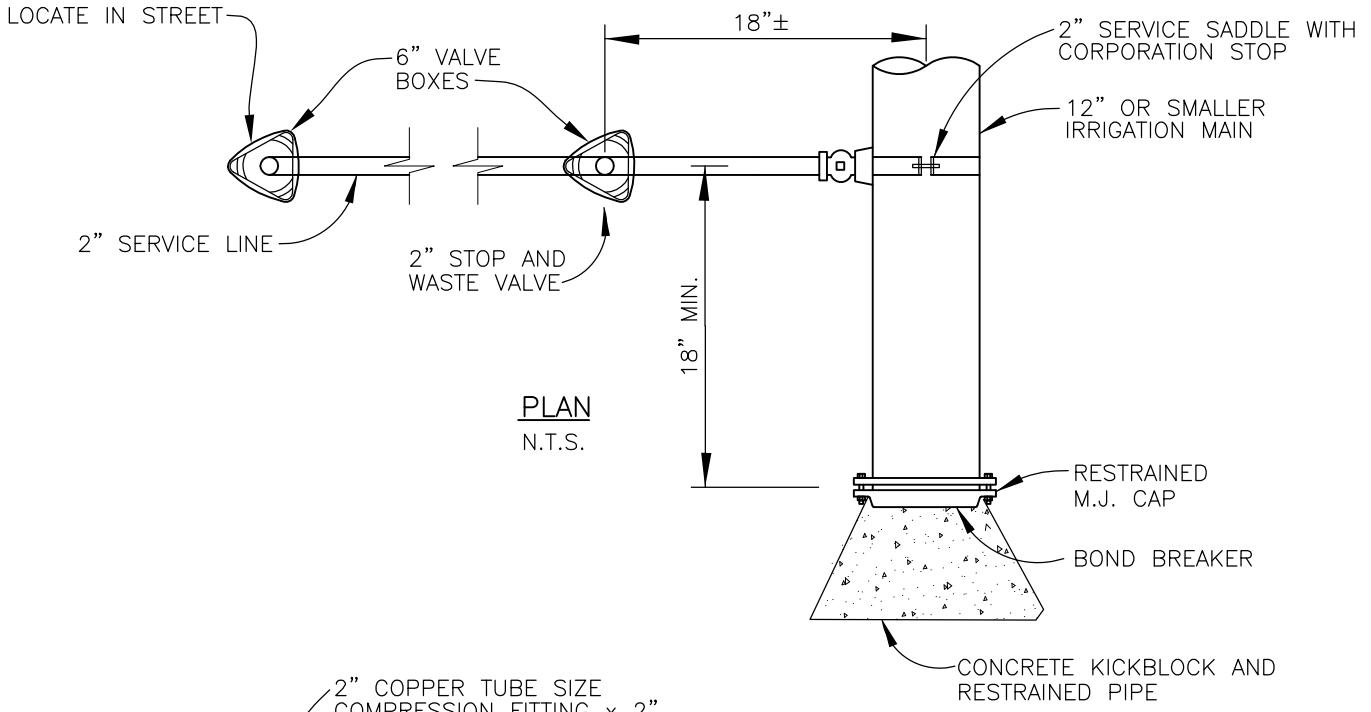

PLAN
N.T.S.

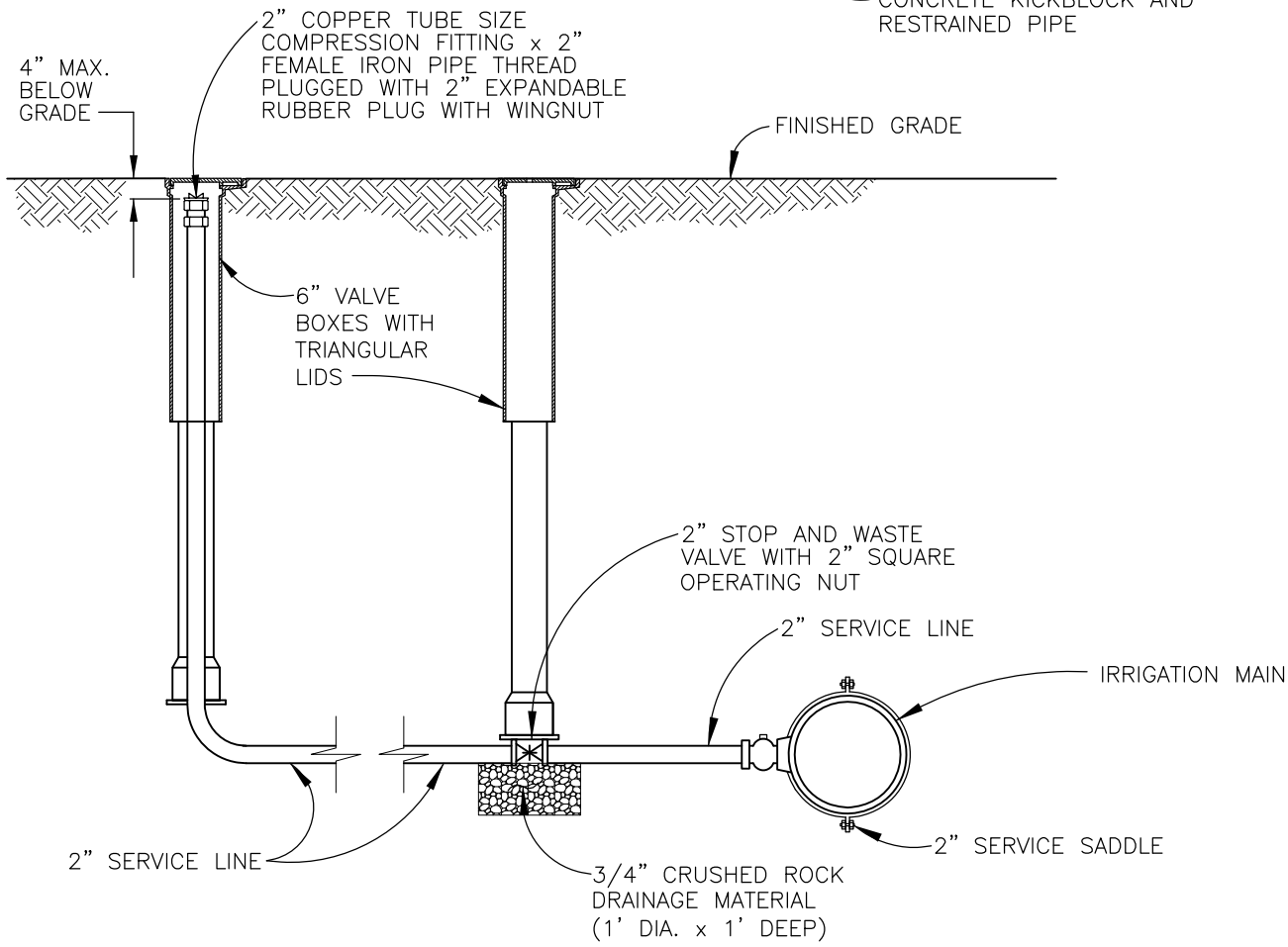

ELEVATION
N.T.S.

REVISIONS:	SOUTH ADAMS COUNTY WATER AND SANITATION DISTRICT	WI-7
6/7/00		
2/1/01	IRRIGATION BLOW-OFF INSTALLATION USING SADDLE TAP (12" AND SMALLER PIPE)	
7/13/11		